Rewarding Learning

Centre Number

Candidate Number

General Certificate of Secondary Education
2025

Biology

Unit 3 Practical Skills
Booklet B
Higher Tier

[GBL34]

GBL34

THURSDAY 19 JUNE, MORNING

TIME

1 hour.

INSTRUCTIONS TO CANDIDATES

Write your Centre Number and Candidate Number in the spaces provided at the top of this page.
You must answer the questions in the spaces provided.
Do not write outside the boxed area on each page or on blank pages.
Complete in black ink only and use a dark HB pencil for drawings and graphs.
Do not write with a gel pen.
Answer **all seven** questions.

INFORMATION FOR CANDIDATES

The total mark for this paper is **70**.
Figures in brackets printed down the right-hand side of pages indicate the marks awarded to each question or part question.
You may use a scientific calculator.
Quality of written communication will be assessed in Question **2(b)**.

15867

24GBL3401

1 **(a)** A group of students carried out an experiment to find out which surface of a leaf loses more water.

The diagram shows the apparatus they used.

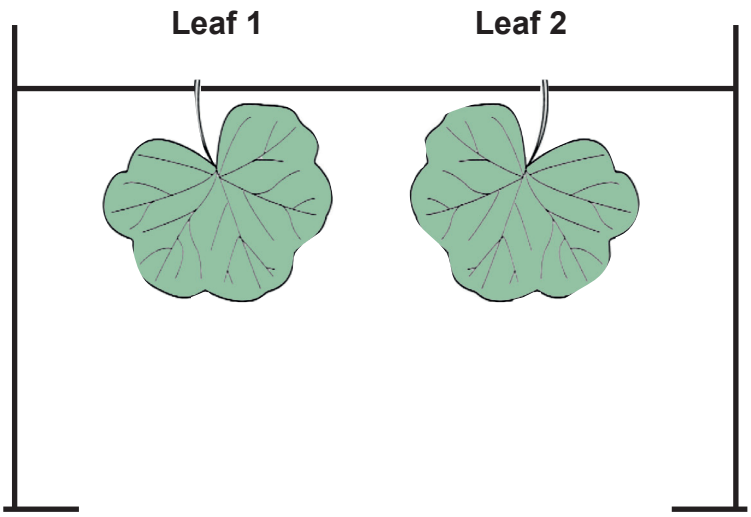

The students covered the **lower** surface of **leaf 1** with Vaseline (petroleum jelly).

The students covered the **upper** surface of **leaf 2** with Vaseline (petroleum jelly).

They weighed each of the leaves and hung them up.

After 24 hours, the students re-weighed the leaves.

The table shows their results.

Leaf	Surface covered with Vaseline	Mass / g		Percentage loss in mass
		at start	after 24 hours	
1	lower	1.60		5.0
2	upper	1.70	1.56	8.2

(i) **Complete the table** by calculating the mass of **leaf 1** after 24 hours.

Show your working.

Give your answer to **one decimal place**.

_____ g [4]

(ii) Explain why the two leaves did not need to be the same mass at the start of the experiment.

_____

_____

_____ [1]

There is a greater percentage loss in mass when the upper surface is covered with Vaseline than when the lower surface is covered with Vaseline.

(iii) Explain why.

_____

_____

_____

_____

_____

_____ [3]

[Turn over

(b) The students hung the leaves up in the same conditions and for the same length of time.

(i) Give one **other** variable the students should have controlled in this experiment.

_____ [1]

The students agreed that a control leaf would have improved their experiment.

(ii) Suggest a suitable control leaf the students could have included in their experiment.

_____

_____

_____ [1]

2 **(a)** The photograph shows onion cells viewed under a light microscope.

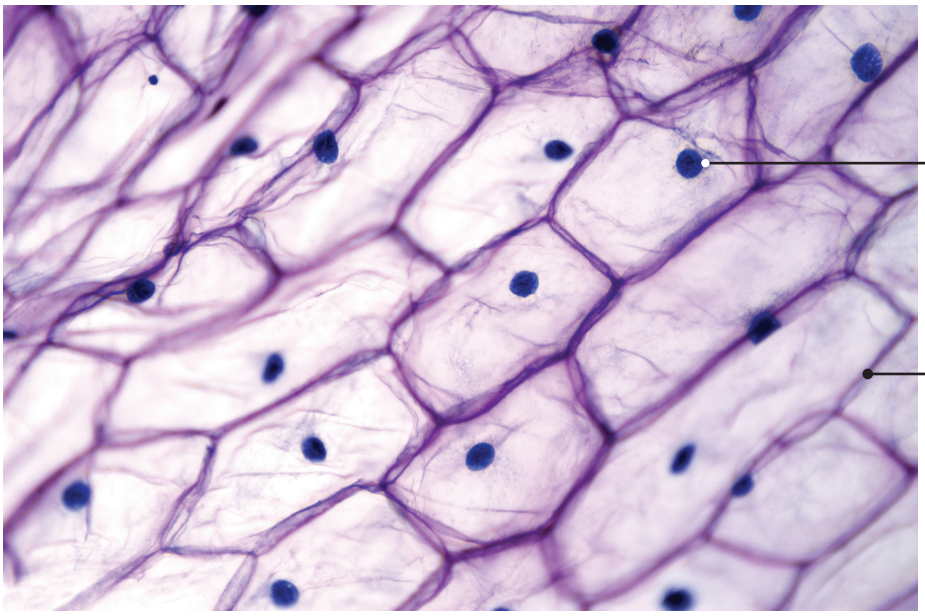

(i) Name part **A**.

_____ [1]

(ii) Describe the function of the nucleus.

_____

_____ [1]

(b) Describe and explain the steps you would carry out to **focus a microscope** to view onion cells.

Details on how to prepare a slide of onions cells are **not required** in your answer.

In this question you will be assessed on your written communication skills, including the use of specialist scientific terms.

[6]

(c) Explain why iodine solution is placed on the onion cells before viewing them using a microscope.

_____

_____

_____

_____ [2]

3 A student carried out food tests on a biscuit.

She found the biscuit tested **positive** for glucose, starch and fat, but **negative** for protein.

Complete the table which shows her results.

Food type	**Reagent**	**Colour of reagent before food test**	**Colour of reagent after food test**
glucose	Benedict's		brick-red precipitate
starch		yellow-brown	
fat	ethanol		white emulsion
protein		blue	

[6]

BLANK PAGE

DO NOT WRITE ON THIS PAGE

(Questions continue overleaf)

4 The data and table show the birth weight, in kilograms (kg), of 25 babies.

1.50	2.98	3.64	3.51	3.00
3.33	3.06	3.65	4.28	3.69
2.86	2.23	3.12	3.13	3.83
3.12	3.81	2.63	3.20	3.52
3.45	3.37	3.44	2.52	2.73

Birth weight interval / kg	**Tally**	
1.50 – 2.49	||	2
	卌	5
3.00 – 3.49		
3.50 – 3.99		
4.00 – 4.49	|	1

(a) Complete the table by:

- filling in the missing birth weight interval in column 1 and writing a suitable heading for column 3. [2]

- completing the tally and results. [2]

15867

(b) Name the type of graph that should be used to display these results.

_____ [1]

(c) Name the **type of** variation shown by the birth weight of these babies.

_____ [1]

(d) Give **two causes** of the variation shown by the birth weight of these babies.

1. _____

2. _____ [2]

BLANK PAGE

DO NOT WRITE ON THIS PAGE

5 A group of students investigated the effect of light on the rate of photosynthesis in a water plant.

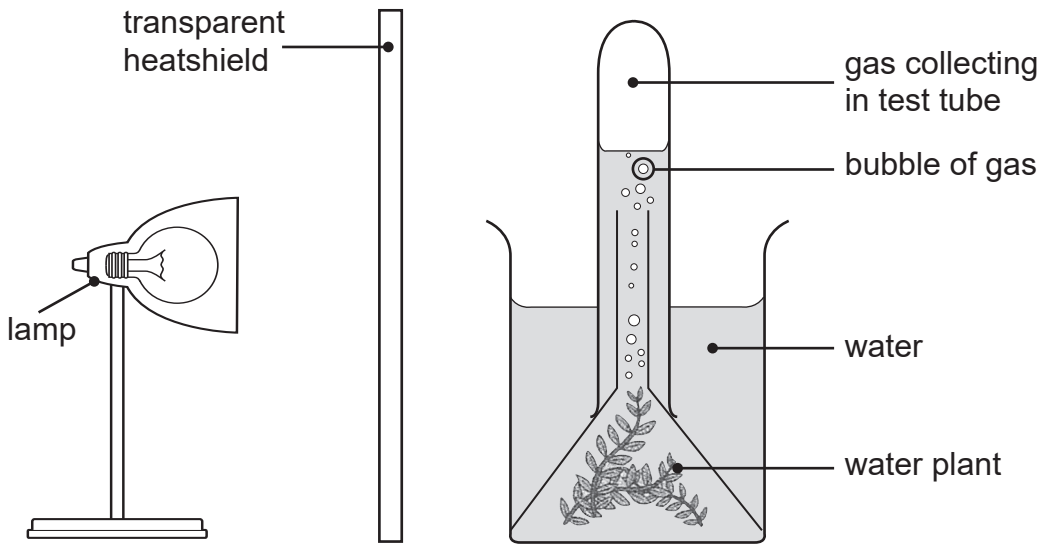

A filament bulb was used in the lamp.
A filament bulb gives out light and heat.

(a) Suggest the function of the transparent heatshield and suggest why it was placed between the lamp and the water plant.

_____

_____

_____

_____

_____ [3]

[Turn over

(b) The students placed the lamp at different distances from the water plant.

They counted the number of gas bubbles given off by the water plant per minute.

The table shows their results.

Distance of the lamp from the water plant / mm	Number of gas bubbles given off per minute
50	20
100	16
150	11
200	7
250	3
300	3

(i) Describe and explain the results when the lamp was moved from 50 mm to 250 mm.

No data is required in your answer.

Description _____

_____

_____

Explanation _____

_____

_____

_____

_____ [4]

(ii) Describe and explain the results when the lamp was moved from 250 mm to 300 mm.

Description _____

_____

Explanation _____

_____ [2]

(c) Suggest **two** reasons why counting the number of gas bubbles is **not an accurate** method of measuring the rate of photosynthesis.

1. _____

_____

2. _____

_____ [2]

(d) **(i)** Name the apparatus which could be used instead of a test tube to give a more accurate measurement.

_____ [1]

(ii) Name the gas produced by photosynthesis.

_____ [1]

6 **(a)** Carbohydrates and fats are sources of energy.

(i) Name **two** simple carbohydrates which are sources of energy in animals.

1. _____

2. _____ [2]

(ii) Name the complex carbohydrate used as a store of energy in

animals. _____

plants. _____ [2]

(b) **Diagram A** shows the apparatus used by a pupil to measure the energy content of a crisp.

Diagram A

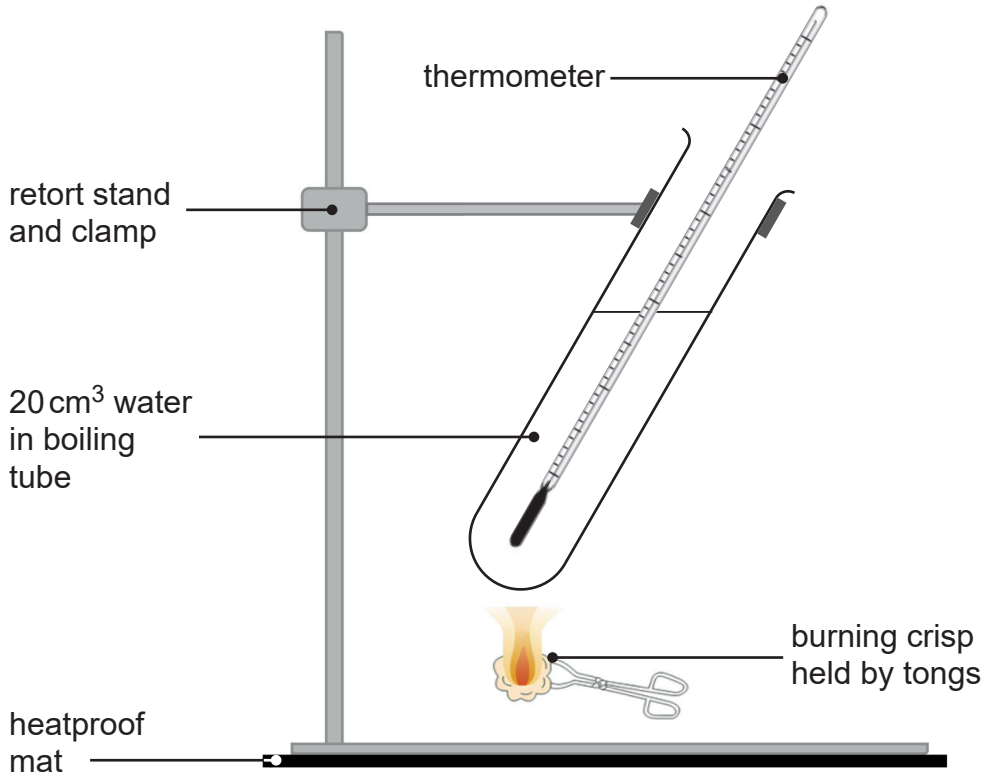

The temperature of the water at the start was **13 °C**.

The pupil used tongs to hold the burning crisp under the boiling tube.

After the crisp had completely burned, the temperature of the water was **20 °C**.

1 cm^3 of water has a mass of 1 g.

The energy content of the crisp is calculated using the formula

energy / J	=	mass of water / g	×	temperature rise / °C	×	4.2

(i) Calculate the energy content of the crisp.

Show your working.

_____ J [2]

The crisp had a mass of **1.7 g**.

(ii) Calculate the energy content of the crisp in **kilojoules per gram**.

Give your answer to **two decimal places**.

Show your working.

_____ kilojoules per gram [3]

[Turn over

The teacher measured the energy content of the same type and mass of crisp using a calorimeter.

Diagram B shows the calorimeter he used.

Diagram B

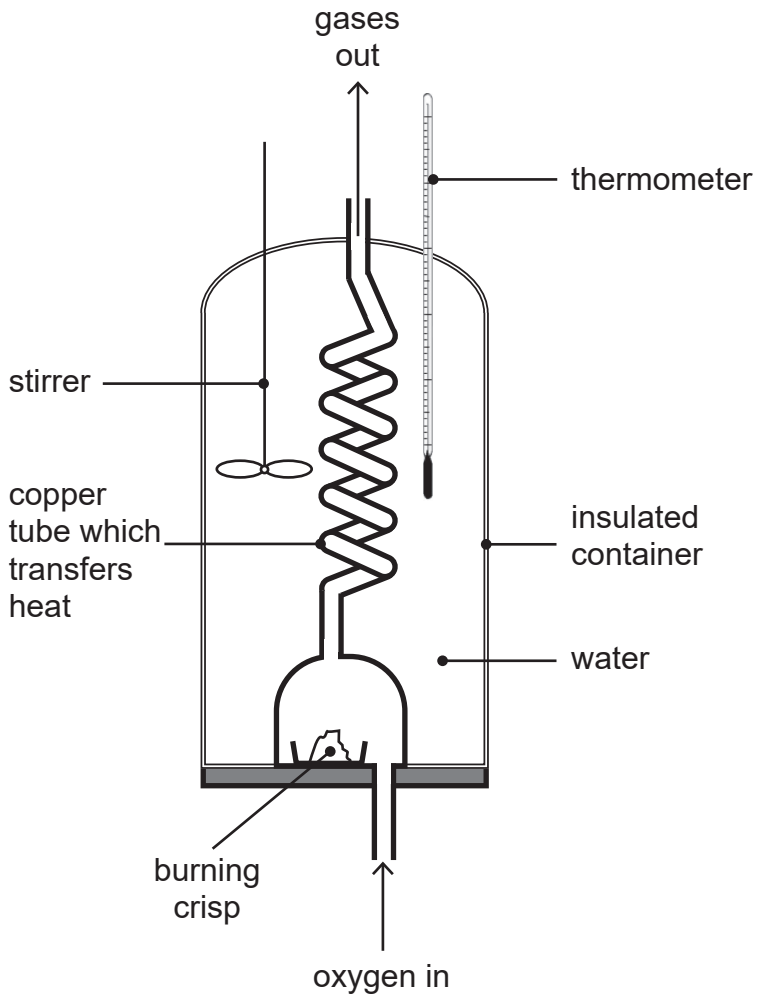

The teacher's value for the energy content of the crisp was 22 kilojoules per gram.

This value was much closer to the value given on the crisp packet.

The pupil and teacher concluded that the calorimeter gave a more accurate value than the pupil obtained using the apparatus in **diagram A**.

(iii) Use evidence from the **diagrams** to suggest **two** reasons why the apparatus in **diagram B** gave a more accurate result than the apparatus in **diagram A**.

1. _____

_____

_____

2. _____

_____

_____ [2]

[Turn over

7 After grass is cut, it decomposes over a number of days.

This decomposition is carried out by saprophytes in the soil.

(a) Give one example of a saprophyte found in the soil.

_____ [1]

A student carried out an experiment to investigate factors which affect the decomposition of grass.

He placed grass cuttings and soil into plastic bags and tied them closed.

The table shows **three** plastic bags he set up.

Bag		Contents of bag
1		• grass cut into large pieces • soil • air absent
2		• grass cut into large pieces • soil • air present
3		• grass cut into small pieces • soil • air present

The student left the three plastic bags for 10 days and measured the temperature inside the bags each day.

(b) Give **two** factors the student should have controlled in his experiment.

1. _____

2. _____ [2]

(c) The graph shows how the temperature inside each bag changed over the 10 days.

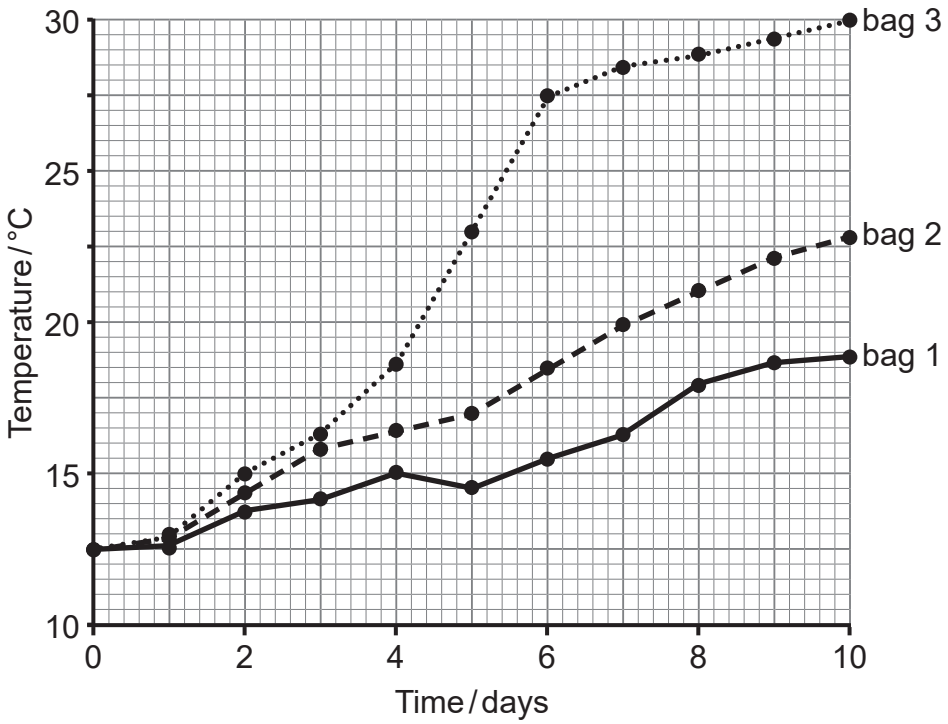

(i) Calculate the **rate** of temperature increase in bag 2 over the 10 days.

Show your working.

_____ °C per day [3]

15867

(ii) Suggest an explanation for the difference in the temperature of **bag 1** compared to **bag 2** over the 10 days.

_____

_____

_____

_____

_____

_____ [3]

(iii) Using your knowledge of saprophytic digestion, explain the difference in the temperature of **bag 3** compared to **bag 2** over the 10 days.

_____

_____

_____

_____

_____

_____ [3]

THIS IS THE END OF THE QUESTION PAPER

SOURCES

Question 1(a): Principal Examiner
Question 2(a): © Getty Images
Question 5: Chief Examiner
Question 6(b): **Diagram A** Chief Examiner
Diagram B Principal Examiner
Question 7(a): Chief Examiner

DO NOT WRITE ON THIS PAGE

For Examiner's use only	
Question Number	Marks
1	
2	
3	
4	
5	
6	
7	
Total Marks	

Examiner Number

Permission to reproduce all copyright material has been applied for.
In some cases, efforts to contact copyright holders may have been unsuccessful and CCEA will be happy to rectify any omissions of acknowledgement in future if notified.